DowKey® Microwave CORPORATION

The DowKey Microwave 535-565 Series Multi-position switches are designed for superior performance in restricted area applications such as portable military test sets. The switches are the smallest multi-position switches available that conform to the mechanical dimensions of a MIL-PRF-3928/18 switch. All models have SMA connectors with mechanically captivated center conductors for minimal RF leakage and low signal loss. Three-, four-, and six-position models are standard.

Typical applications for the 535-565 Series include:

- Automatic Test Equipment
- Compact Switch Matrixes
- Multi-Band or Alternate Source Selection

DowKey® 535-565 Series Normally Open, SMA

Specifications :

Operating Voltage:
(across temperature range)
12 Vdc (11-14 Vdc)
28 Vdc (24-32 Vdc)

Coil Current (Nominal):
12 Vdc 333 mA
28 Vdc 161 mA

Switching Time:
20 mS maximum

Operating Temperature:
-25ºC to +65ºC

Mechanical Life, Cycles:
1 x 10^6 minimum

Nominal Weight:
4.0 oz., (115g.)

RF Characteristics

Frequency GHz	VSWR (max)	Isolation dB (min)	Ins. Loss dB (max)	RF Power Watts (CW)
DC-4	1.25	70	0.20	100
4-8	1.35	65	0.30	70
8-12	1.40	60	0.40	60
12-18	1.50	60	0.50	45

Connectors and Part Numbers

Nominal Coil Voltage	Connector Type	Switch Configuration SP3T	SP4T	SP6T
12 Vdc	SMA	535-5208	545-5208	565-5208
28 Vdc	SMA	535-5308	545-5308	565-5308
Normally open with indicators				
12 Vdc	SMA	535-520822	545-520822	565-520822
28 Vdc	SMA	535-530822	545-530822	565-530822
Normally open with TTL Compatible Logic				
12 Vdc	SMA	535-520802A	545-520802A	565-520802A
28 Vdc	SMA	535-530802A	545-530802A	565-530802A
Normally open with indicators, TTL Compatible Logic				
12 Vdc	SMA	535-520822A	545-520822A	565-520822A
28 Vdc	SMA	535-530822A	545-530822A	565-530822A

DowKey Microwave Corporation 1667 Walter Street, Ventura, California 93003 (805) 650-0260 • FAX (805) 650-1734

Mechanical

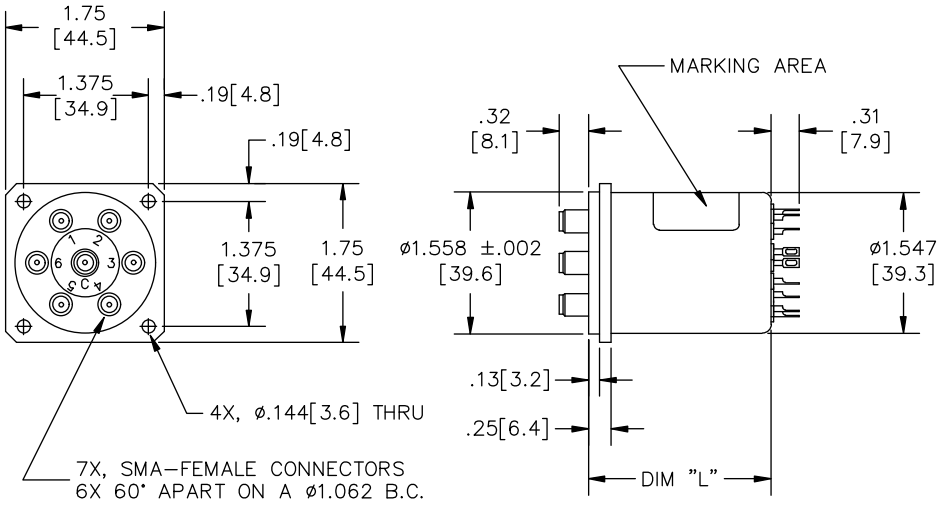

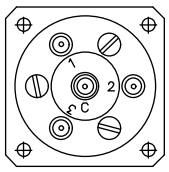

3 POSITION

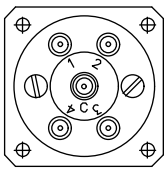

4 POSITION

DIM "L" (MAX)	MODEL
1.41[35.8]	5X5–5X08
1.90[48.3]	5X5–5X0822
1.70[43.2]	5X5–5X0802A
2.08[52.8]	5X5–5X0822A

Available Options

Moisture Seal

9 PIN "D" Plug*

BCD Decoding Circuit

Operating Voltages:
15, 20, 24 Vdc

-55°C to +85°C Operation

***"D" Plug not available with indicators**

Electrical

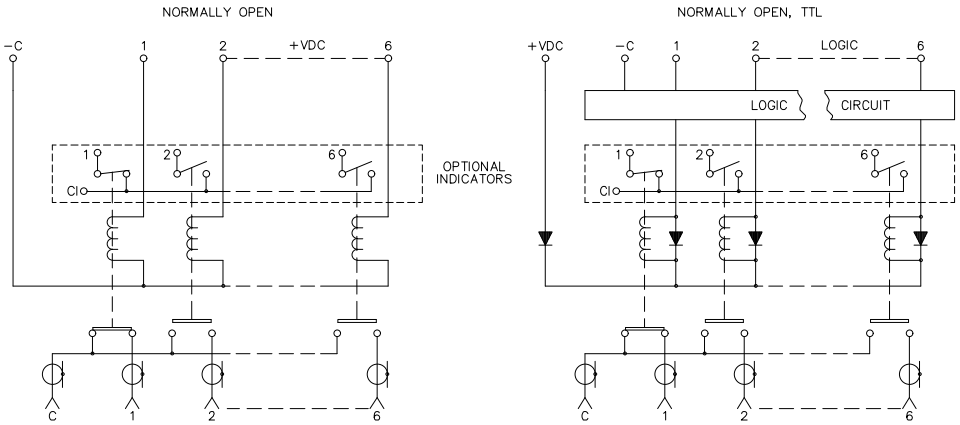

DowKey Microwave Corporation 1667 Walter Street, Ventura, California 93003 (805) 650-0260 • FAX (805) 650-1734